CELEBRATING 25 YEARS OF TRUST

Kühl™

USER MANUAL

SEPTEMBER 2026

HONEYCOMB PADDING

POWERFUL MOTOR

IS 3315

CM/L- 8400265015

For BIS certification details, please visit www.bis.gov.in

1 YEAR WARRANTY* ON PRODUCT

2 YEARS WARRANTY* ON COMPRESSOR

Kühl BRIZO CI-145

NEXT-GEN AIR COOLERS.

Welcome to Kühl

Dear Customer,

Thank you for choosing Kühl Air Coolers! You have taken a smart step towards powerful, efficient, and reliable cooling. Designed to deliver superior performance even during extreme summers, Kühl Air Coolers combine advanced cooling technology with smart features for everyday comfort. Equipped with a dedicated ice chamber and high-efficiency honeycomb cooling pads, they ensure fast cooling and long-lasting freshness. The powerful air delivery circulates cool air evenly across the room, while multidirectional caster wheels allow effortless mobility from one space to another. Built to work seamlessly on inverter power, Kühl Air Coolers keep you cool even during power cuts. Engineered for performance, convenience, and durability, Kühl Air Coolers bring together dependable cooling and unmatched value. Welcome to comfort that moves with you, wherever you need it.

Thanking you,
Kühl Air Coolers

TABLE OF CONTENTS

1. Introduction 4

2. Features 4

3. Specifications 5

4. Items in the Box 5

5. Know your Product 7

6. Operating Instructions 7

7. Control Operations 8

8. Safety Instructions..... 8

9. Troubleshoot.....12

10. Regulations 13

INTRODUCTION

The Kühl Brizo CI-145 is designed for powerful and reliable cooling, perfect for both large homes and commercial spaces. Featuring honeycomb cooling pads, it delivers fast and long-lasting cooling. Powerful air delivery ensures wide coverage, while multidirectional caster wheels offer easy mobility.

FEATURES OF YOUR Kühl AIR COOLERS

- **Honeycomb Cooling Pads:** Ensure superior cooling efficiency with better water retention and faster heat absorption.
- **Powerful Air Delivery:** Delivers strong and uniform airflow of 7500 CMH at 1350 RPM for effective cooling across large spaces.
- **Multi-directional Wheels:** Enable smooth and effortless movement from one room to another.

SPECIFICATION

SPECIFICATIONS	BRIZO CI-145
TANK CAPACITY	145 L
SWEEP	500 MM
SPEED	1350 RPM
POWER	250 W
AIR DELIVERY	7500 CMH
COOLING MEDIA	HONEYCOMB PAD
AIR THROW DISTANCE	55 FT

ITEM IN THE BOX

ITEM NAME	QUANTITY
COOLER	1 N
WHEELS	5 N
WARRANTY CARD	1 N

KNOW YOUR PRODUCT (Kühl AIR COOLERS)

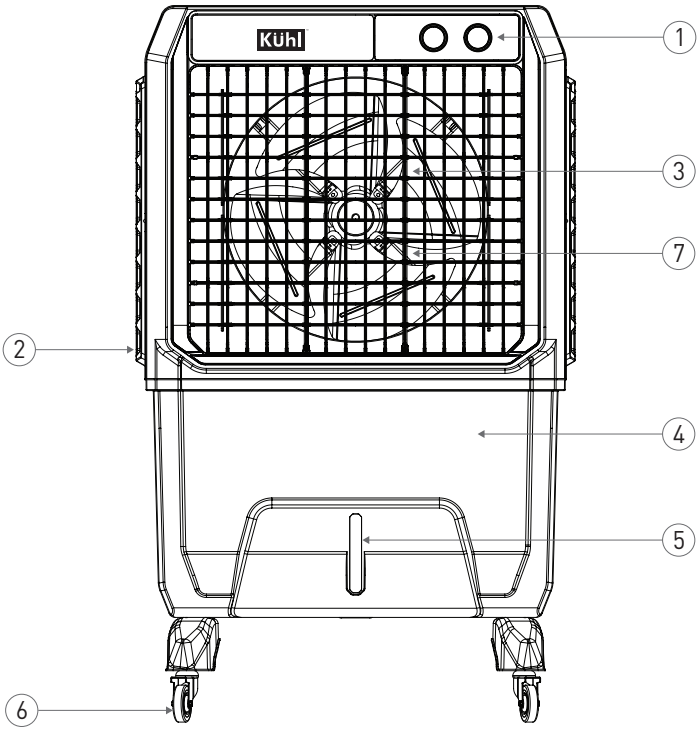

1. Control Knobs
2. Water Inlet
3. Horizontal Louvre/Shutter
4. Water Tank
5. Water Level Indicator
6. Castor Wheel
7. Louvre/Shutter Lever

OPERATING INSTRUCTIONS

Installation Area

Before installing the appliance, select a location that meets the following criteria:

- Rigid, dry and levelled surface
- Avoiding direct sunlight
- Sufficient ventilation
- Far from heat sources such as coal and gas.

Unpacking Instructions

- Remove the cardboard box and styrofoam packing.
- Lift the Air Cooler and remove the base packing.
- Remove the tie warp securing the power cord.
- Remove the caster wheels and install them on the cooler. (Ensure wheels with locks are fixed on the front side of the cooler).

Installation process

The following steps are to be followed during air cooler installation:

- Always ensure that your cooler is plugged into a rated voltage, frequency and earthing outlet only.
- First, make a dry run to check all the functions of the cooler.
- Fill water into the tank with the Filler/Pipe, and fill till the level of the Indicator shown. (Caution: Do not overfill the tank.)
- Switch "ON" the power supply.
- Switch "ON" the pump 5 minutes before switching on the fan for proper honey pad wetting.
- Turn the "ON" Swing, Pump, and Speed functions as per your desired setting.
- Run the cooler for 2 hours so that during the first run, all the unpleasant odours get cleared.

NOTE:

- Do not overfill
- Do not start the fan first; let the honeycomb pad get wet first

CONTROL OPERATIONS

- **SPEED CONTROL:** Rotate the "SPEED" knob clockwise to get the desired level of speed (High, Medium, Low) for air delivery. Rotate the "SPEED" knob anti-clockwise to select "OFF", and only the fan motor will be powered off.

- **COOL/PUMP:** Rotate the "SWING/COOL" or "FUNCTION" knob clockwise to select the "COOL/PUMP" function. It will activate the water pump to circulate water in the cooling pad for cool air.

- **SWING + COOL**: Rotate the "SWING/COOL/PUMP" or "FUNCTION" Knob clockwise to select the "SWING+COOL" function to get cool air with auto vertical deflection.

- **SWING:** Rotate the "SWING" or "FUNCTION" knob clockwise to select the "SWING" function for auto air deflection in the vertical direction. The swing function can be stopped at your desired angle.

- **FUNCTION:** All the functions will be turned off if you rotate the "SWING/COOL" or "FUNCTION" knob anti-clockwise to select "OFF".

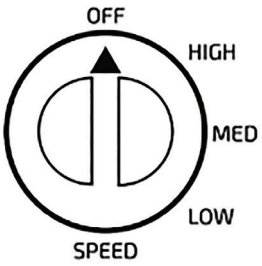

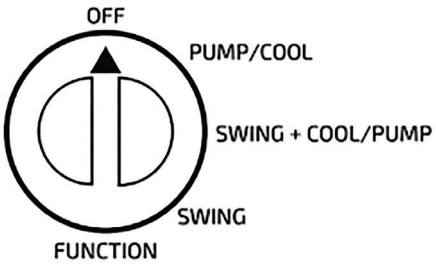

SAFETY INSTRUCTIONS

- Before using the product, check for any damage. If there is any damage, do not use the product and immediately contact the retailer/shopkeeper.
- Do not operate the product with a damaged cord/plug or if it is dropped and damaged in any manner. If the product requires any safety-related attention, please call the toll -free number.
- To protect against fire, electric shock or injury, do not place the cord, plug or product in water or any other liquid.
- Do not let the cord hang over the edge of the table or touch hot surfaces.

- Do not place the product on or near a hot gas/electric burner.
- Do not install the product in an area prone to combustible gas leaks, grease or metal dust.
- This product is not intended to be used by children or differently-abled persons.
- To protect against electric shock, always unplug the product from the outlet when it is not in use and before cleaning.
- Do not yank on the cord as it may damage the cord and eventually cause an electric shock.
- To avoid burns/cuts and risks of personal injury, use extreme caution while handling the product.
- This product is intended for household use only, not for commercial or industrial use. Use of the product for anything other than its intended purposes will void the warranty.
- To avoid an electrical overload, do not operate another high-wattage product on the same power socket.
- The use of an accessory attachment not approved by the manufacturer may result in fire, electric shock or injury.
- Avoid contact with pets, plants and insects when the product is in operation.

THE ELECTRICAL SHOCK

- Before any maintenance, unplug the product from the mains.
- When connected to power, a dedicated socket is to be used.
- The power cord should not be bent or put under the pressure of heavy objects.
- Do not use a modified or altered length of the power cord.
- Clean the dust and the power cord pin before inserting it into the power socket.
- In case the power cord is damaged or the socket holes are loose, do not switch on the Air Cooler.
- Do not touch the power cord with wet hands and clothes.
- Do not pull the wire; hold the power cord head to plug and unplug from the power outlet.
- Do not use any "T" Junction to share power for other products.
- Do not put the power cord under stress.

RISK TO CHILDREN

- Children should not play with the product. Cleaning and user maintenance should not be done by children without any supervision.
- Animals and children are not allowed to climb the product. Check the product before every operation.

- Young children should be supervised so that they do not play with the product.
- Do not allow children to put foreign parts into the Cooler from the front panel opening.
- Do not allow children to move the cooler when the tank is filled with water.
- Do not allow children to pull the Air cooler with the power cord.

RISK OF EXPLOSION

- Do not keep items such as burning candles on top of or beside the cooler.

INSTALLING THE PRODUCT

- The opening of the air-throw must not be obstructed by any components/parts.
- The Air Cooler shall not be installed in a bathroom or a very wet room, or rooms with explosive or caustic gases.
- Remove all packing before using the product.
- The plug must be accessible after installation.
- The floor must be levelled so that there isn't any issue of uniform wetting of the honeycomb.

RISK OF DAMAGING PRODUCTS

- Do not climb up and sit on top of the Air Cooler.
- Do not lean against the Air Cooler while it is running.
- Do not move the Air Cooler from one end to another when it is filled with water.

OPERATING THE PRODUCT

- During the first-time operation of the new Air Cooler, it is suggested to run the Air Cooler for 15 minutes in no-load condition (no water used & pump to be turned off).
- Fill the water in the Air Cooler and run the cooler for 2 hours. It will remove any unpleasant smells.
- Flammable, explosive or toxic solvents are forbidden to be used or mixed with water in the tank.
- Ensure the window is open for fresh air to enter and cool the room.
- Never refill the water while the air cooler is in operation.

MAINTENANCE

Cleaning and draining the water tank

- Before cleaning the Cooler, switch the unit "OFF" and remove the power cord plug from the socket.
- Move the unit to a location where the water can be drained. Remove the drain plug located at the bottom of the unit to empty the tank.

- Refill the water tank with clean water up to the maximum level and drain it completely.
- Use a damp cloth to remove the dirt and dust from the surface of the unit; never use corrosive elements or chemicals to clean this product.
- When the product is not in use, store the unit in a dry place away from direct sunlight.

CLEANING OF THE HONEYCOMB

- Switch off the cooler and disconnect the plug from the main socket.
- Remove the honeycomb from the cooler unit and clean the honeycomb by pouring clean water until the accumulated dust is removed.
- Take the Air Cooler outdoor for draining water. To drain the water from the cooler, remove the plug which is provided at the bottom of the tank.
- Fix the disassembled honeycomb pad back to the panel and refit it.

EASY STEPS TO REMOVE THE BACK PANEL HONEYCOMB

Step 1

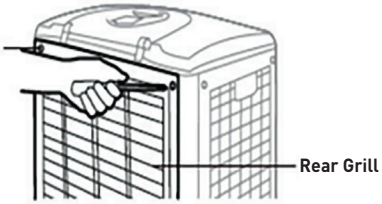

Step 2

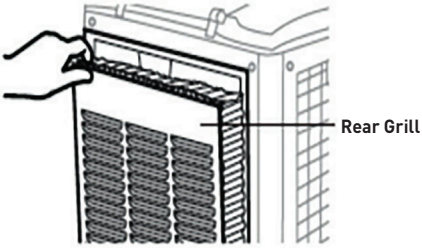

Step 3

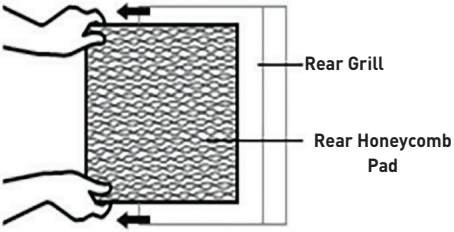

TROUBLESHOOT

S/N	Problem	Cause	Solution
1	No discharge of air	Power cord is not plugged in	Make sure power cord is plugged in and the supply switch is ON.
		Power Supply Cut.	Check that Unit main supply plug is connected to main socket and Supply is ON.
			Check if the House Fuse is intact in the supply line.
2	Not Cooling but Unit is making Noise.	The pump is not turned ON.	Turn ON the Cool Function from the Control Panel.
		Low or no water in the tank when cool is selected.	Refill water in the tank.
		Damaged pump or Calcium deposits on Blower.	Contact Service Person.
3	Odour emission.	New unit	When the unit is used for thefirst time, the honeycomb cooling media will have an odour which will dissipate within a week of initial use.
		Old unit	There may be an Algae issue. Replace the honeycomb cooling media, and contact the Service person.
4	Cooler not operating initially	The power cord is not plugged in.	Make sure the power cord is plugged in and the supply switch is ON.
		Power outlet or faulty power supply.	Check the power outlets. Check the power supply with the technician.
		Incorrect Voltage.	Check that the power supply is the same as specified on the rating label.
5	Noise	Motor assembly if the screw is loose.	Re-tighten the screws of the motor.
		The pump is running in dry condition.	Refill the water in the tank.

REGULATIONS

- **E-WASTE DECLARATION:** This marking on the product, accessories or literature indicates that the product and its electronics accessories (e.g. charger, battery, cables, etc.) should not be disposed of with other household waste at the end of their working life. Electronic equipments contain many hazardous metallic contaminants such as lead, cadmium, and beryllium and brominated flame-retardants. Improper handling and/or improper recycling of the Electronic Waste results in these hazardous metals/substances getting released into our eco and biological system, thereby leading to various health hazards. So, to prevent possible harm to the environment or the human health from uncontrolled waste disposal, please separate these items from other type of waste and recycle them responsibly to promote the sustainable reuse of material resources.

DO'S

- Always drop your used electronic products, batteries and accessories after end of their life in nearest authorized collection point/center or hand over to authorized recycler for disposal.
- Drop the discarded Electronics Equipments only in the bins meant for the Electronic Waste.

DON'TS

- The product and its accessories are not meant for mixing into household waste stream or regular garbage bins.
- Do not dispose damaged or leaking Lithium ion (Li-ion) battery with normal household waste.

INFORMATION FOR IMPROPER DISPOSAL & HANDLING

Any disposal through unauthorized agencies/person will attract action under the Environmental (Protection) Act, 1986. If batteries are not properly disposed off it can cause harm to human health or the environment.



CONTACT US AT:
KENT RO SYSTEMS LTD.
E-6, Sector-59, Noida, U.P. - 201 309, India. Call: 92-789-12345
E-mail: service@kuhl.in or visit us at www.kuhl.in

*T&C Apply. This warranty is only applicable to the products sold in India.